Top View

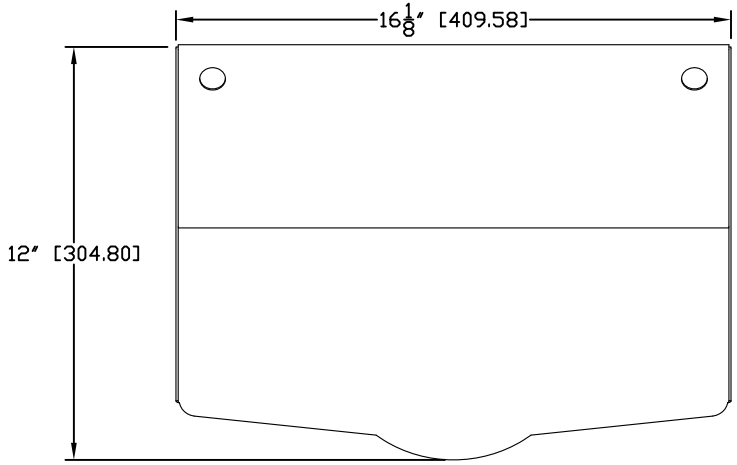

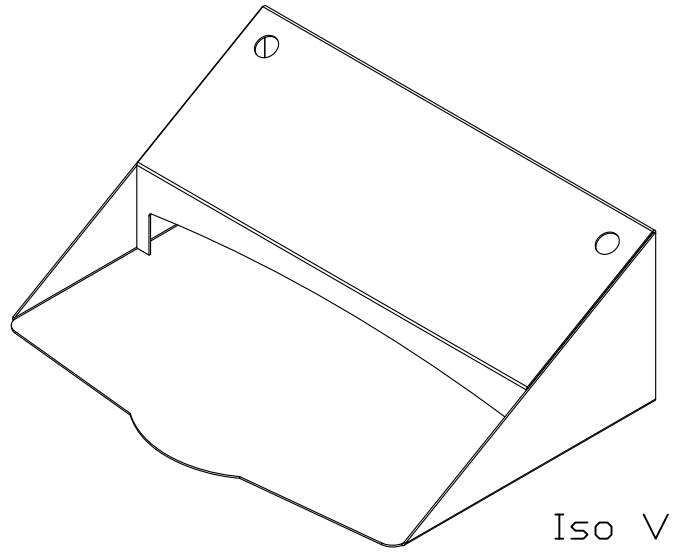

Iso View

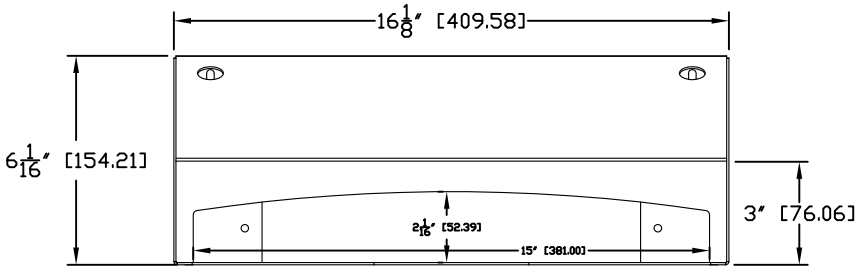

Front View

Side View

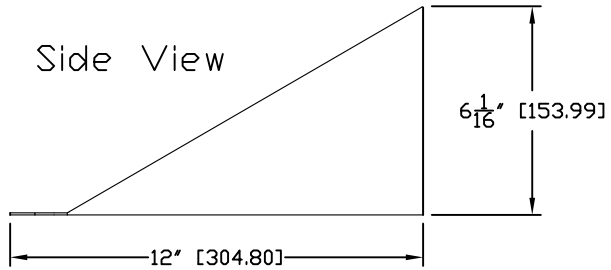

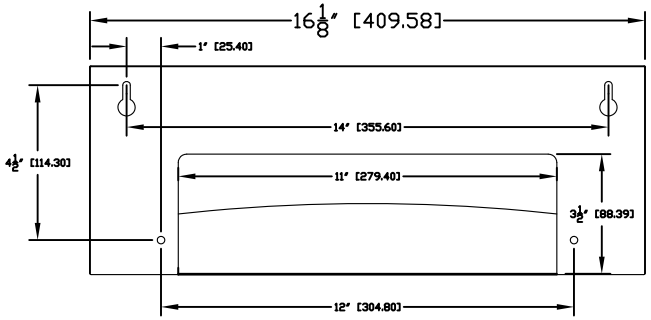

Back View

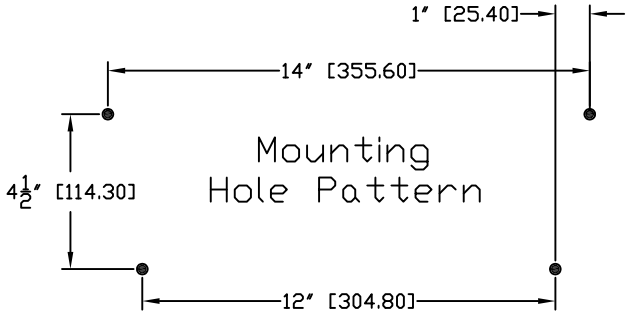

Mounting Hole Pattern

GENERAL NOTES:

DIMENSIONS ARE IN INCHES [mm] UNLESS OTHERWISE NOTED. DO NOT DISTRIBUTE WITHOUT EXPRESS WRITTEN PERMISSION OF VADDIO. DUE TO OUR CONTINUING EFFORTS TO ENHANCE OUR PRODUCTS, WE RESERVE THE RIGHT TO CHANGE SPECIFICATIONS WITHOUT PRIOR NOTICE OR OBLIGATION.

vaddio

UNLESS OTHERWISE NOTED:
DIMENSIONAL LIMITS APPLY AFTER FINISH
MACHINED SURFACES 125
EDGES & FILLETS R .005/.015
FRACTIONS ± 1/32
ANGLES ± 1°
DEC. .XX = ± .015
.XXX = ± .005
.XXXX = ± .000

THIS DRAWING, INCLUDING ALL SUBJECT MATTERS INDICATED THEREIN OR DERIVED THEREFROM, COMPRISES PROPRIETARY INFORMATION AND IS THE EXPRESS PROPERTY OF VADDIO. All Rights Reserved-Copyright 2006

Title: VADDIO 535-2000-250			
DRAWN: JCM	CHECKED: RAR	APPROVED: RAR	DATE: 8/8/06
MATERIAL: SHT ALUMINUM			SIZE: D
FINISH: PAINT, BLACK FLAT POWDER COAT, PCC# 806-394			SCALE: 1:2
TITLE: Wall Mount Shelf for TANDBERG Set-top Series Codecs 990/880/770/550 MXP	SHEET: 1-1	DRAWING NO.: 341-462	REV.: A